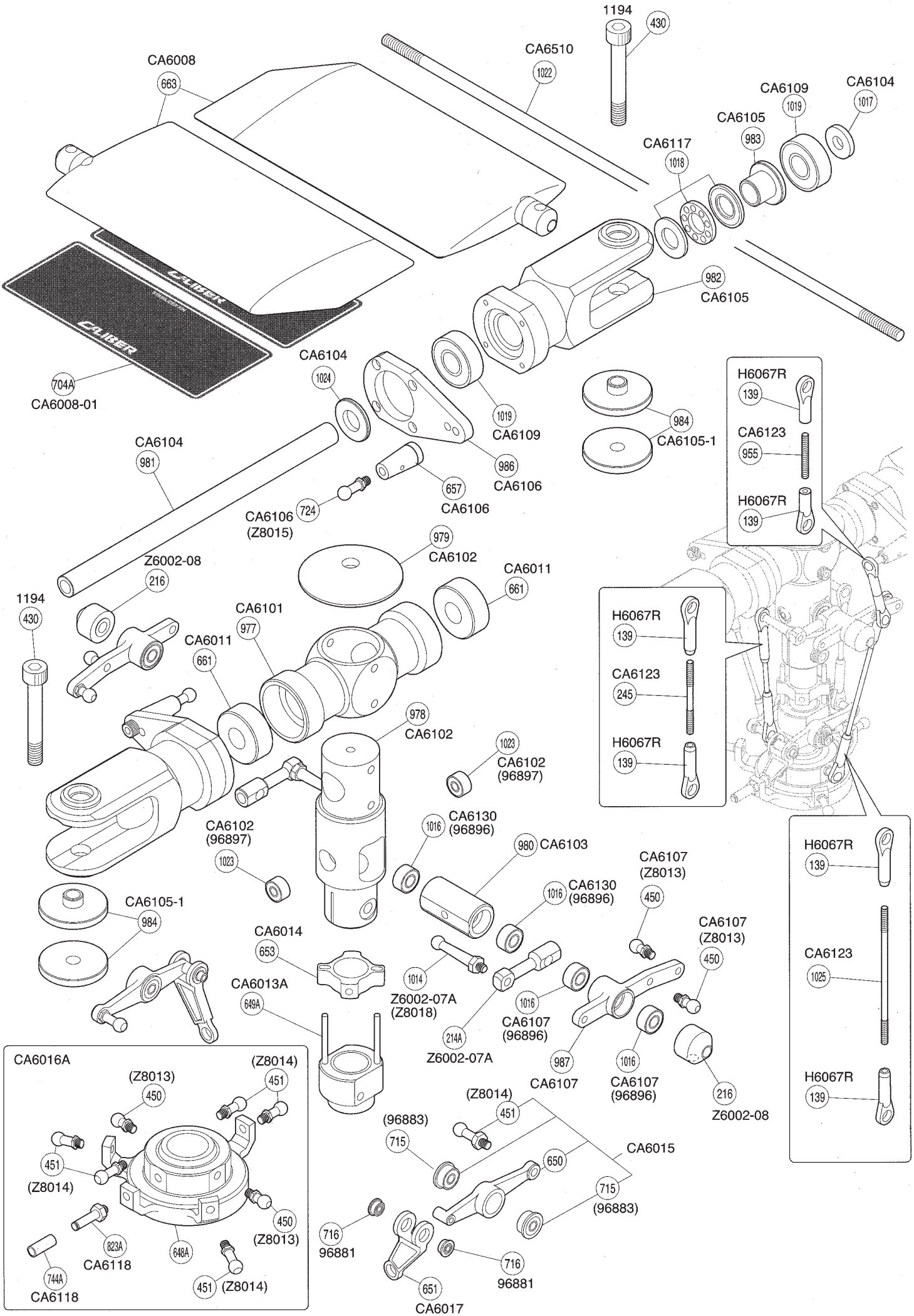
1194
430
CA6510
1022
CA6008
663
CA6109
1019
CA6104
1017
CA6105
983
CA6117
1018
982
CA6105
704A
CA6008-01
CA6104
1024
1019
CA6109
984
CA6105-1
986
CA6106
657
CA6106
CA6106
(Z8015)
724
CA6104
981
979
CA6102
Z6002-08
216
CA6011
661
1194
430
CA6101
977
CA6011
661
978
CA6102
1023
CA6102
(96897)
CA6102
(96897)
1023
CA6130
(96896)
1016
980
CA6103
CA6107
(Z8013)
450
1016
CA6130
(96896)
CA6105-1
984
CA6014
653
CA6013A
649A
1014
Z6002-07A
(Z8018)
1016
CA6107
(96896)
214A
Z6002-07A
987
CA6107
1016
CA6107
(96896)
CA6107
(Z8013)
450
216
Z6002-08
H6067R
139
CA6123
955
H6067R
139
H6067R
139
CA6123
245
H6067R
139
H6067R
139
CA6123
1025
H6067R
139
CA6016A
(Z8013)
450
(Z8014)
451
451
(Z8014)
450
(Z8013)
823A
CA6118
648A
744A
CA6118
451
(Z8014)
(Z8014)
451
(96883)
715
650
CA6015
715
(96883)
716
96881
716
96881
651
CA6017

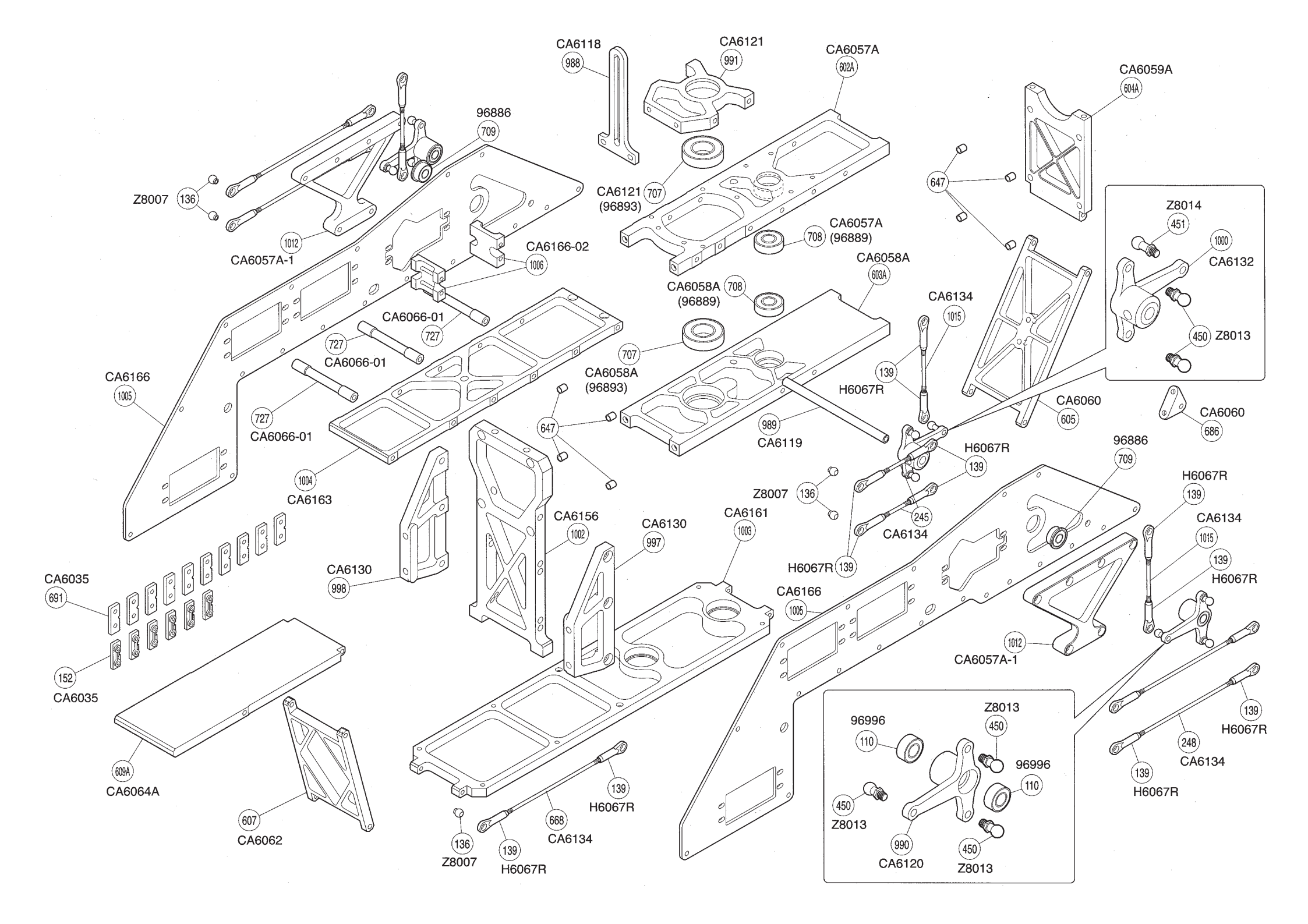
CA6118
988
CA6121
991
CA6057A
602A
CA6059A
604A
96886
709
Z8007
136
1012
CA6057A-1
CA6121
(96893)
707
CA6057A
(96889)
708
647
CA6166-02
1006
CA6058A
603A
CA6058A
(96889)
708
CA6066-01
727
727
CA6066-01
707
CA6058A
(96893)
CA6134
1015
139
H6067R
Z8014
451
1000
CA6132
450
Z8013
CA6166
1005
727
CA6066-01
CA6060
605
CA6060
686
989
CA6119
647
1004
CA6163
H6067R
139
96886
709
Z8007
136
245
CA6134
H6067R
139
H6067R
139
CA6134
1015
139
H6067R
CA6156
1002
CA6130
997
CA6161
1003
CA6130
998
CA6035
691
CA6166
1005
1012
CA6057A-1
152
CA6035
Z8013
450
96996
110
96996
110
450
Z8013
990
CA6120
450
Z8013
139
H6067R
248
CA6134
139
H6067R
609A
CA6064A
607
CA6062
139
H6067R
668
CA6134
136
Z8007
139
H6067R

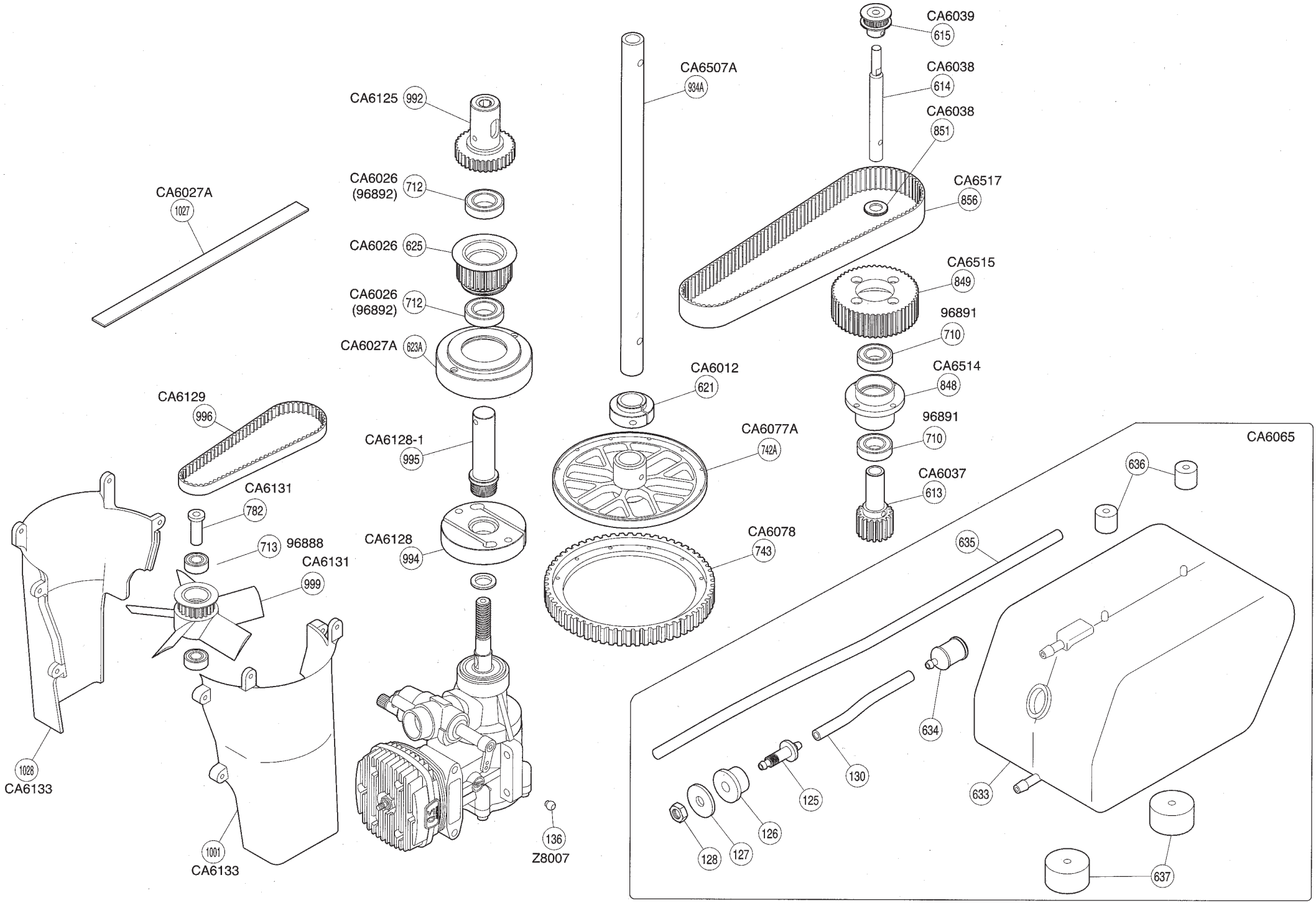
CA6039
615
CA6507A
934A
CA6038
614
CA6038
851
CA6125
992
CA6517
856
CA6026
(96892)
712
CA6027A
1027
CA6026
625
CA6515
849
CA6026
(96892)
712
96891
710
CA6027A
623A
CA6012
621
CA6514
848
CA6129
996
96891
710
CA6128-1
995
CA6077A
742A
CA6065
CA6037
613
636
CA6131
782
CA6078
743
635
713
96888
CA6128
994
CA6131
999
634
130
1028
CA6133
125
633
126
136
Z8007
128
127
1001
CA6133
637

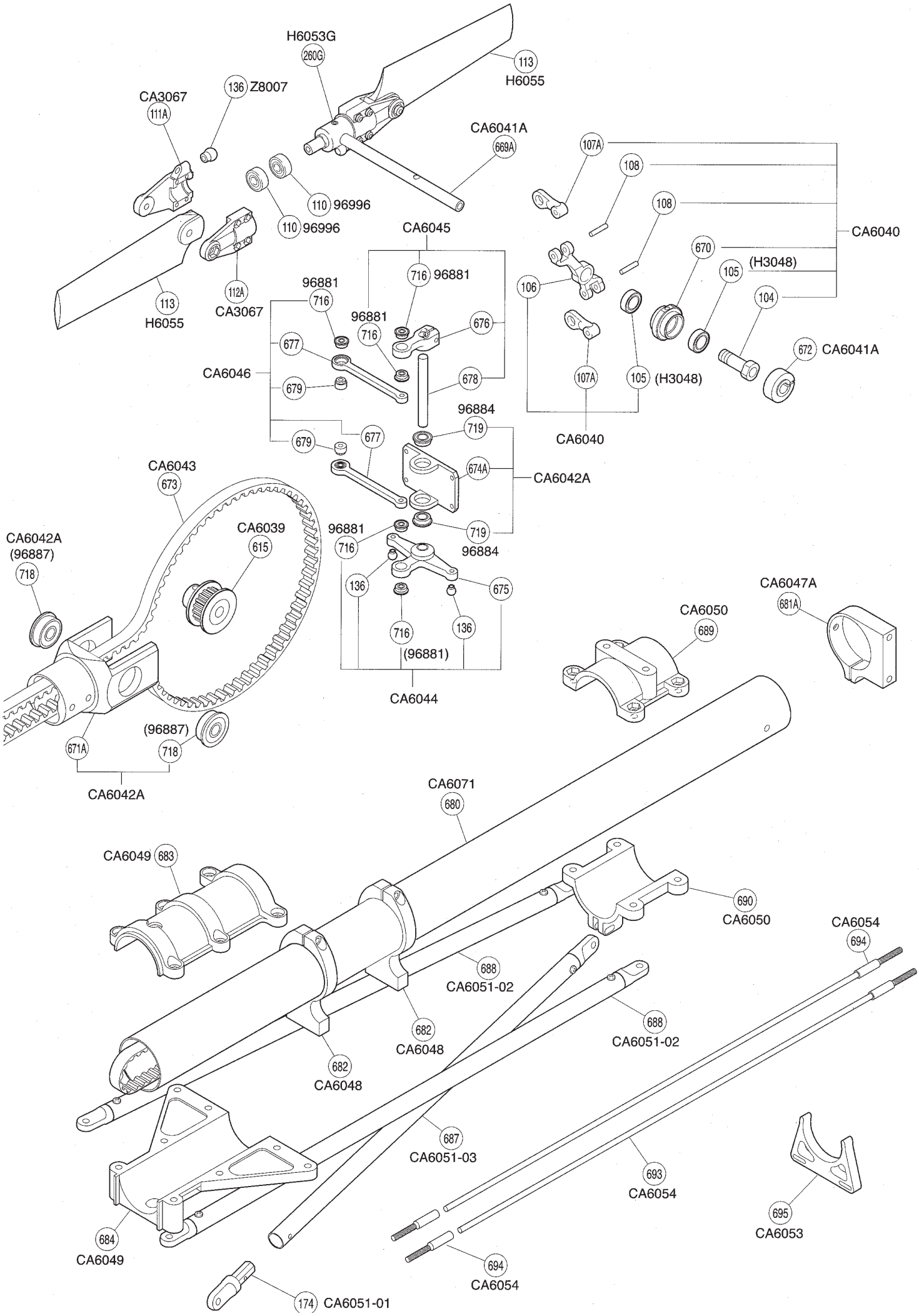
H6053G
260G
113
H6055
136 Z8007
CA3067
111A
CA6041A
669A
107A
108
108
CA6040
110 96996
110 96996
CA6045
670
(H3048)
105
104
113
H6055
112A
CA3067
96881
716
716 96881
96881
716
676
106
677
CA6046
679
678
107A
105 (H3048)
672 CA6041A
96884
719
679
677
CA6040
674A
CA6042A
CA6043
673
CA6039
615
96881
716
719
96884
CA6042A
(96887)
718
136
675
CA6047A
681A
CA6050
689
716
136
(96881)
CA6044
(96887)
718
671A
CA6042A
CA6071
680
CA6049 683
690
CA6050
CA6054
694
688
CA6051-02
682
CA6048
688
CA6051-02
682
CA6048
687
CA6051-03
693
CA6054
695
CA6053
684
CA6049
694
CA6054
174 CA6051-01

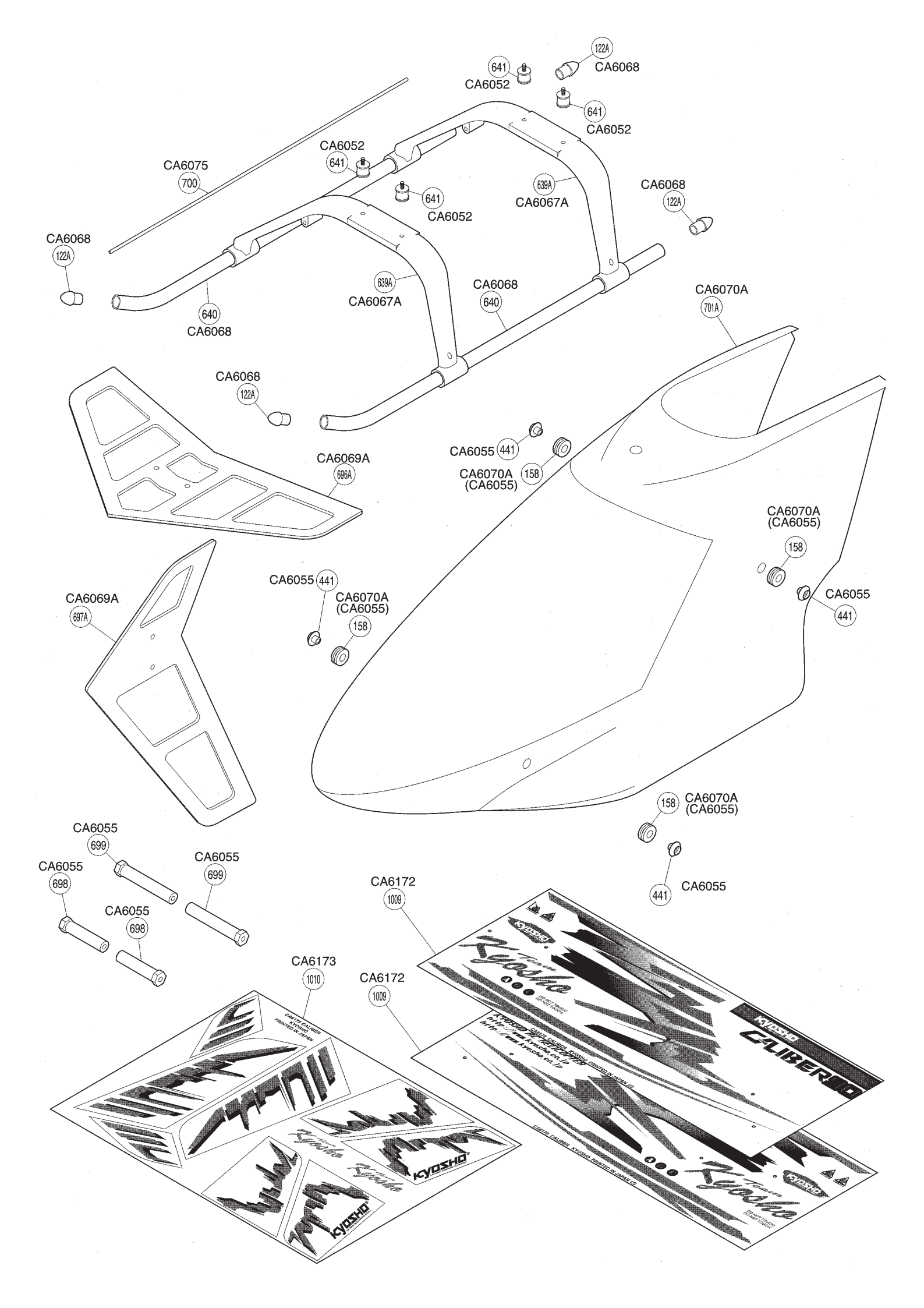
122A
CA6068
641
CA6052
641
CA6052
CA6052
641
CA6075
700
641
CA6052
639A
CA6067A
CA6068
122A
CA6068
122A
639A
CA6067A
CA6068
640
640
CA6068
CA6070A
701A
CA6068
122A
CA6055 441
CA6069A
696A
CA6070A
(CA6055)
158
CA6070A
(CA6055)
158
CA6055
441
CA6069A
697A
CA6055 441
CA6070A
(CA6055)
158
158
CA6070A
(CA6055)
441
CA6055
CA6055
699
CA6055
699
CA6055
698
CA6055
698
CA6172
1009
CA6173
1010
CA6172
1009
Kyosho
CALIBER
CA6173 CALIBER
KYOSHO
PRINTED IN JAPAN
Kyosho
kyosho